HI-TIP (HI)

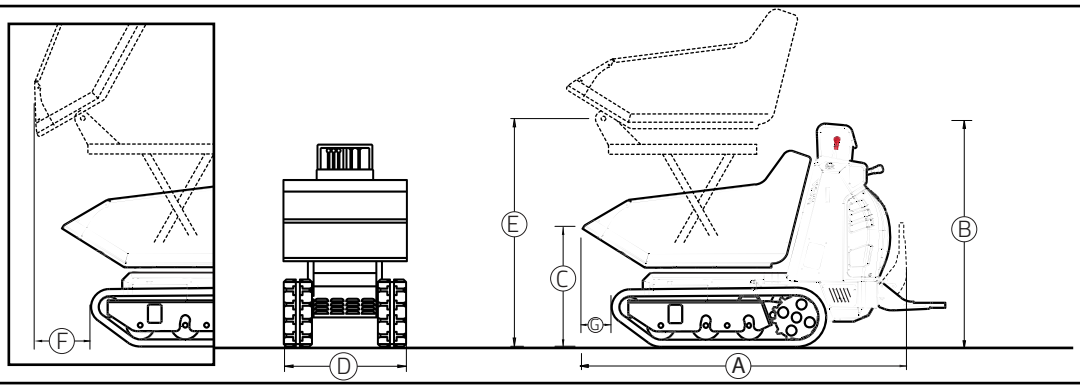

	mm		inch.
A	1926	A	75.8
B	1336	B	52.6
C	739	C	29.1
D	810	D	31.9
E	1500	E	59.1
F	830	F	32.7
G	260	G	10.2

	C10.85	C13.85	C14.85
OPERATIVE CAPACITY	800 kg 1764 Lb	800 kg 1764 Lb	800 kg 1764 Lb
TOTAL WEIGHT	668 kg 1472.7 Lb	643 kg 1418 Lb	690 kg 1521 Lb
STRUCK	0,28 m³ 0.33 yd³	0,28 m³ 0.33 yd³	0,28 m³ 0.33 yd³
HEAPED SAE	0,36 m³ 0.45 yd³	0,36 m³ 0.45 yd³	0,36 m³ 0.45 yd³

CORMIDI

C85 MINI TRACK DUMPER

DRIVE THE CHANGE